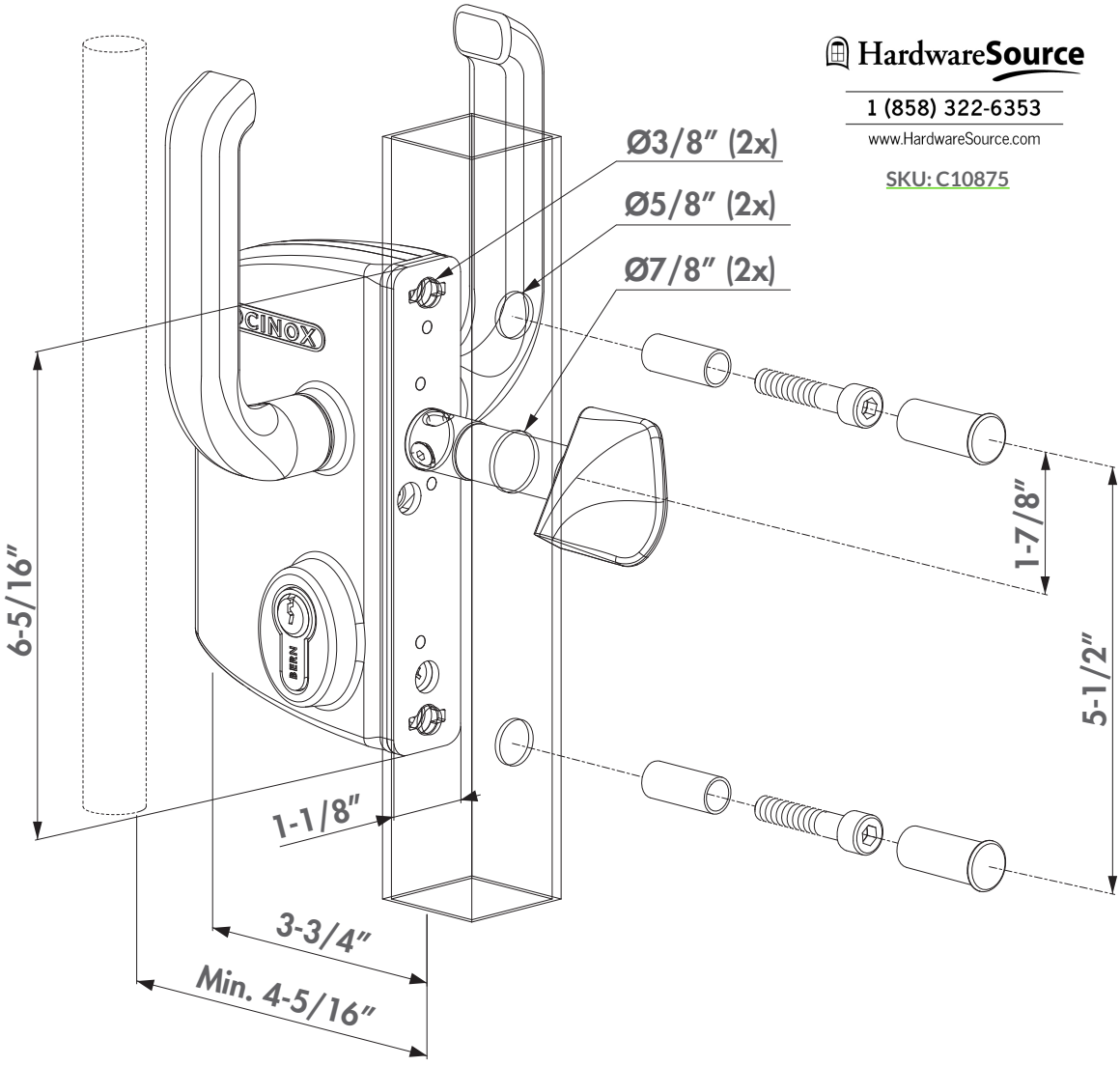
HardwareSource
1 (858) 322-6353
www.HardwareSource.com
SKU: C10875
Ø3/8" (2x)
Ø5/8" (2x)
Ø7/8" (2x)
OCINOX
BERN
6-5/16"
1-7/8"
5-1/2"
1-1/8"
3-3/4"
Min. 4-5/16"